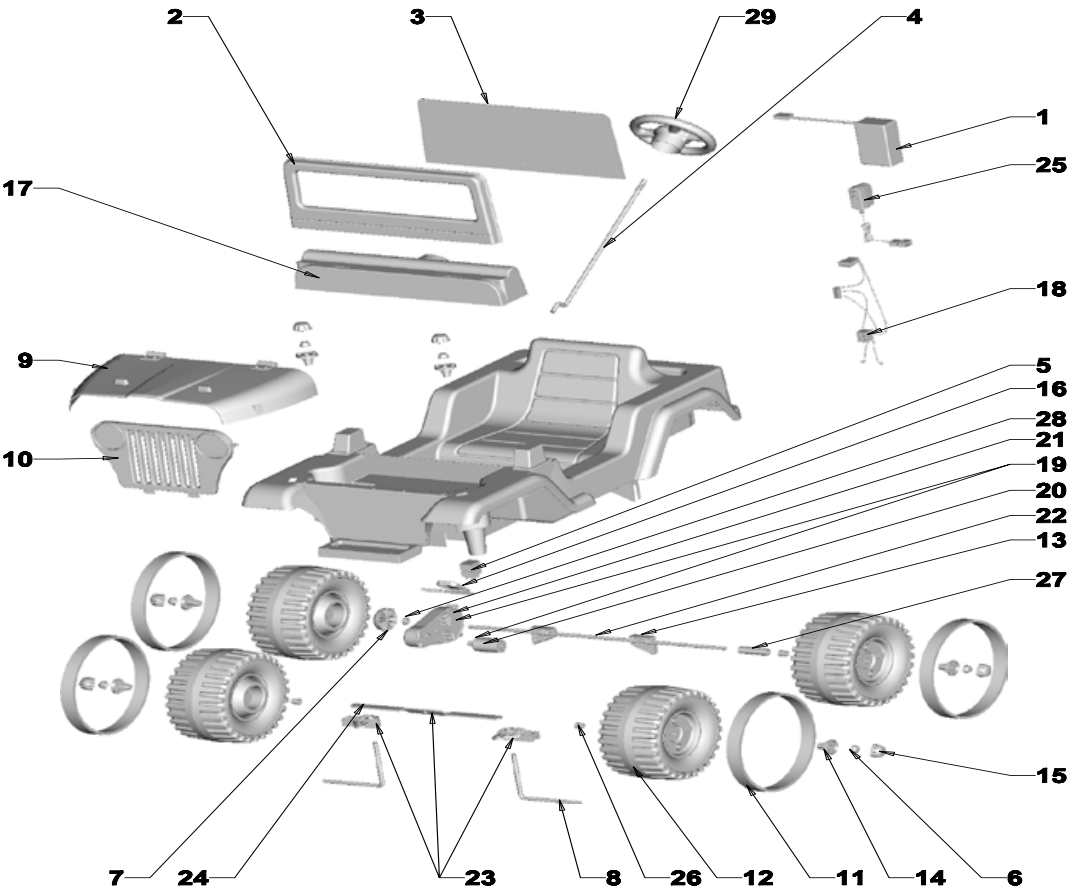

N9732
BARBIE JEEP BARBIE WRANGLER
PRESCHOOL SERIES

Age Range:	3+
Weight Limit:	50 LB
Surfaces:	Asphalt and Other Hard Surfaces
Speed:	2.5 For/Res
Colors:	Pink with Purple Wheels
Intro:	2009
Suggested Retail:	$87.29
Box Dimensions:	38" x 26.375" x 17.125"
Warranty:	One Year Vehicle Six Months Battery

POWER WHEELS by Fisher-Price®

Item	Part #	Description	QTY
1	00801-1457	4 AMP INTERNAL FUSE BATTERY	1
2	N9732-2339	WINDSHIELD FRAME	1
3	3800-6733	WINDSHIELD	1
4	N9356-4409	STEERING COLUMN	1
5	00801-1773	CONTROL SWITCH F/R	1
6	0801-0604	.354 RETAINER - PALNUT	4
7	73233-2239	DRIVER	1
8	73241-4509	FRONT AXLE	2
9	N9732-6119	HOOD FOR BARBIE JEEP	1
10	N9732-2149	GRILL	1
11	3800-8643	TRACTION BAND SET BLACK (2)	4
12	N9732-2459	WHEEL - BLACK	4
13	74770-2369	AXLE POST SUPPORT	2
14	N9732-2129	WHEEL BUSHING/ RETAINER	6
15	N9732-2049	COVER RETAINER KEEPER	6
16	74765-9389	FOOTBOARD ASSEMBLY	1
17	N9732-2139	DASH ASSEMBLY	1
18	**N9356-9799**	**WIRING HARNESS**	**1**
19	**74780-9509**	**MOTOR GEARBOX ASSY #3A**	**1**
20	**74590-9539**	**MOTOR PINION ASSEMBLY**	**1**
21	**74580-9269**	**3A GEARBOX W/O MOTOR**	**1**
22	N9356-4509	REAR AXLE	1
23	76181-4229	STEERING LINKAGE - NO SUB	1
24	*SEE 23	STEERING ROD	1
25	00801-1483	CHARGER 4Amp FUSED - 6V	1
26	74770-2539	ROUND BUSHING	3
27	76136-4419	REAR AXLE SPACER	1
28	73233-2369	SPACER - BLACK	1

Parts Not Shown

Item	Part #	Description	QTY
	00801-1567	WRENCH 9/16" (Assembly Tool)	1
	00905-0116	3/8" -16 LOCK NUT	HD Bag
	0801-0222	SCREW PHIL HD 6x1/2	HD Bag
	0801-0253	WASHER. 5/16	HD Bag
	0801-0255	SCREW PHIL HD #10x1/2	HD Bag
	0801-0538	**FOOTSWITCH - 3 PIN**	**1**
	0801-0226	CAP NUT .437 - BLACK	2
	0912-8001	#8x3/4 INCH SCREW	HD Bag
	N9732-9459	HOODLATCH ASSEMBLY	1
	N9732-2229	SHIFTER LEVER	1
	N9732-2749	STEERING WHEEL CAP	1
	N9732-2379	FALSE MOTOR	1
	78480-2129	SPARK PLUG WIRES	1
	N9732-0320	MAIN LABEL SHEET	1
	N9732-0330	SMALL LABEL SHEET	1
	N9732-0920	MANUAL	1
	N9356-9279	HARDWARE BAG	1
	N9732-9289	PARTS BAG	1
	N9732-9679	DASHBOARD SET	1
	N9732-9719	STEERING WHEEL ASSEMBLY	2
	74550-2689	7/16 ROUND AXLE BUSHING	2

Bold and underlined parts are to be purchased and installed by Service Centers only. These items may not be sold directly to consumers by Service Centers or Fisher-Price.

4/27/2010 11:52